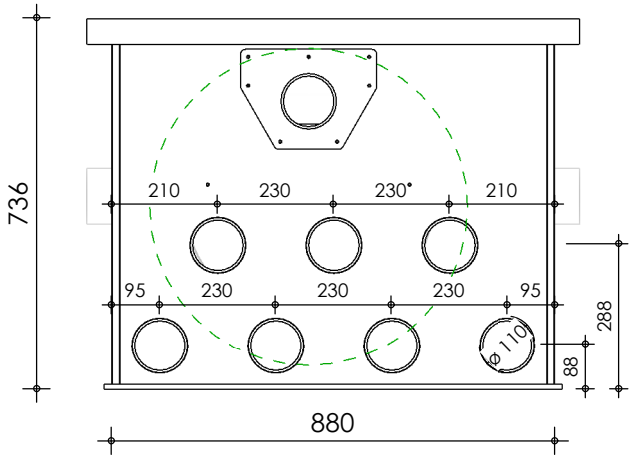

Front view

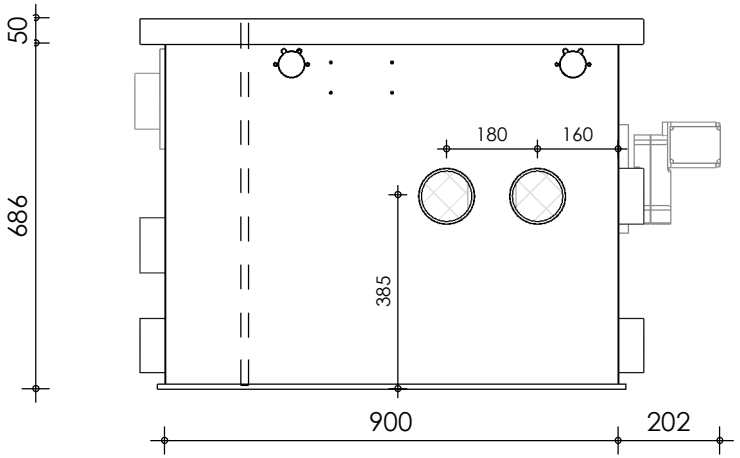

Right-side view

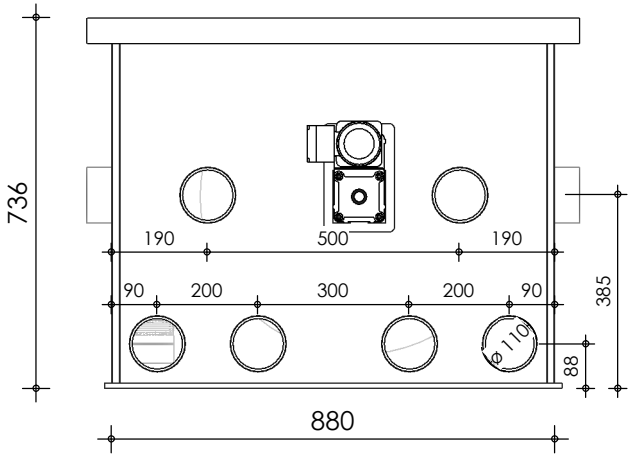

Rear view

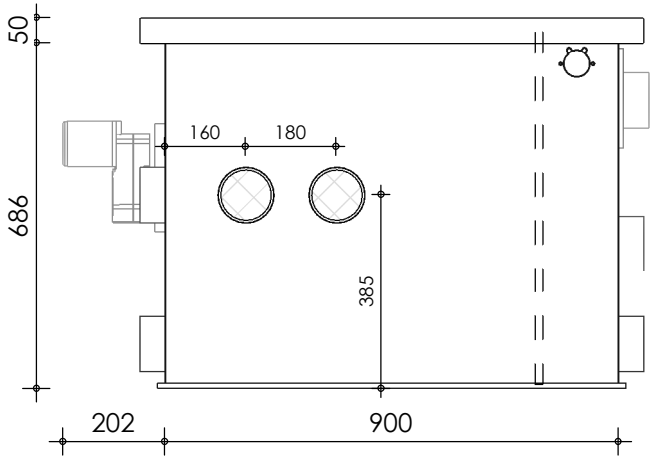

Left-side view

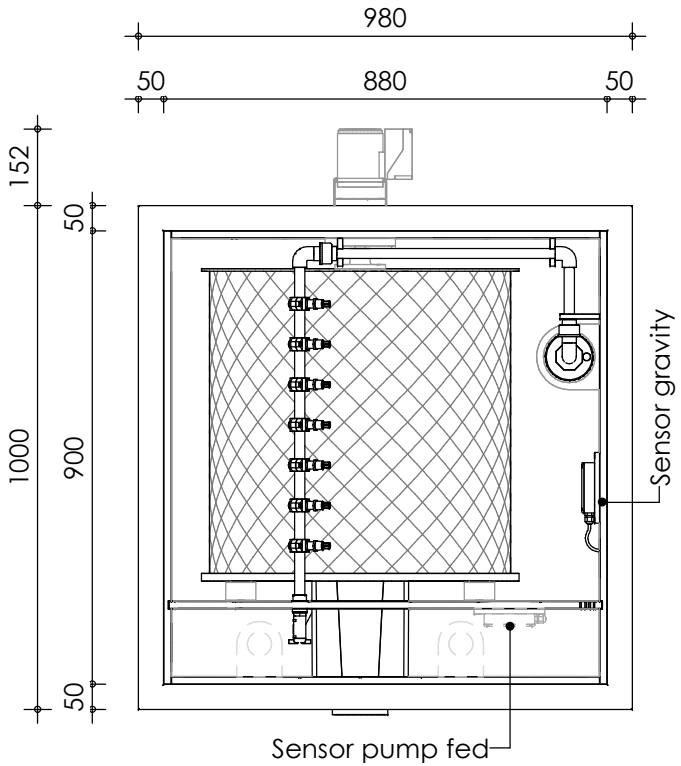

Top view

description:	scale :	date :	water running height :
PP75-P - Drum filter	1 : 15	v.2024	120 mm

AQUA FORTE